BH-316A REV. AA

REVISIONS			RELEASED	
REV.	DESCRIPTION		DATE	APPROVED
W	25030	UPDATE NOTE 3(PG.2) DELETE "CADMIUM" PROCESS	93/11/6	W.S.
Y	26023	ADDED ITEMS 12 & 13	94/5/4	RS
AA	26131	"FAA/PMA" STAMP ADDED	94/6/15	RS

FAA/PMA

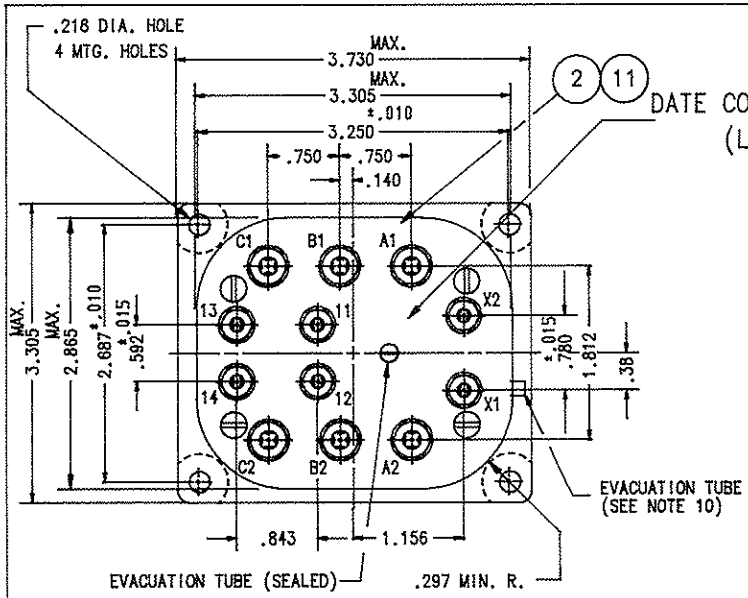

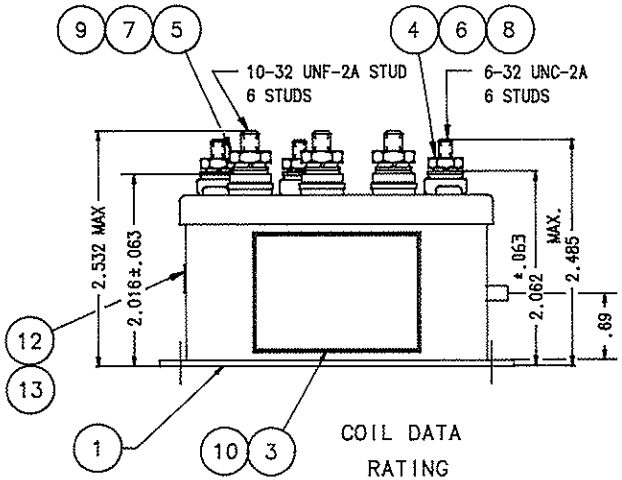

CONSTRUCTION	HERMETIC SEALED, REPAIRABLE		
CONTACT CONFIGURATION	MAINS 3 P S T N.O		
	AUX. 1 N.O. , 1 N.C.		
CONTACT RATING			
VOLTAGE	115 VAC 400 HZ	28 VDC	BOTH
CURRENT AT 125° C	MAINS	MAINS	AUX.
RESISTIVE	50 AMP	50 AMP	5 AMP
MOTOR	50 AMP	50 AMP	5 AMP
INDUCTIVE	50 AMP	25 AMP	5 AMP
LAMP	25 AMP	25 AMP	1 AMP

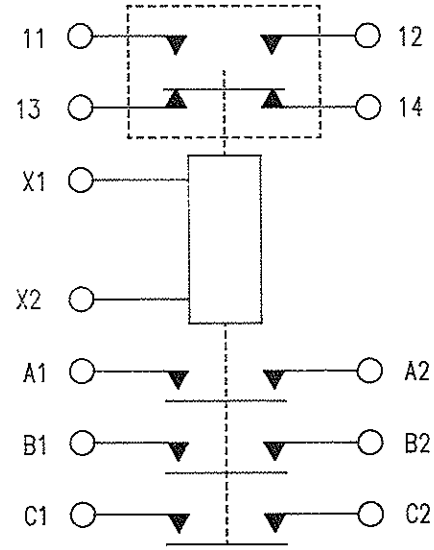

COIL DATA

RATING	CONTINUOUS DUTY
NOMINAL VOLTAGE	28 VDC
PICKUP VOLTAGE	18 VDC MAX.
DROPOUT VOLTAGE	1.5 - 7 VDC
CURRENT AT 29 VDC	0.5 AMPS MAX.
OPERATE TIME AT 25°C & 28 VDC	
CLOSE TIME	0.025 SECONDS MAX.
RELEASE TIME	0.010 SECONDS MAX.
BOUNCE MAIN	2 MS MAX.
BOUNCE AUX.	4 MS MAX.
AMBIENT TEMPERATURE	-55°C TO +125°C
LIFE ELECTRICAL	100,000 CYCLES
LIFE MECHANICAL	200,000 CYCLES
WEIGHT	1.20 LBS. MAX.

FIND NO	QTY REQD	PART OR IDENTIFYING NO	NOMENCLATURE OR DESCRIPTION	FSCM NO	DRAWING OR SPECIFICATION	MATERIAL OR NOTE
13	1	39529-024	OVERLAY			
12	1	58400-128	PLATE - FAA/PMA			
11	1	39529-007	OVERLAY			
10	1	39529-001	OVERLAY			
9	6	51810-054	WASHER LOCK NO. 10 SPLIT		AN 935 B10	BRONZE
8	6	51806-014	WASHER LOCK NO. 6 SPLIT		AN 935 B6	BRONZE
7	12	51702-844	WASHER FLAT 3/8 X 13/64 X .032			BRASS
6	12	51702-204	WASHER FLAT 3/8 X 9/64 X .032			BRASS
5	6	50410-084	NUT 10-32 X 3/8 X 1/8 HEX			BRASS
4	6	50406-064	NUT 6-32 X 5/16 X 7/64 HEX			BRASS
3	1	42594-001	PLATE-NAME			
2	1	42405-001	PLATE-WIRING DIAGRAM			
1	1	42300-010	CONTACTOR ASSEMBLY-PRI.			

REF.
BOEING
10-61445-21

UNLESS OTHERWISE SPECIFIED DIMENSIONS ARE IN INCHES TOLERANCES ON

2 PL DEC.	3 PL DEC.	ANGLES
± .06	.010	± 1°

DR BY	RLS	94/6/15
CHK BY	RS	94/6/17
ENGR	DM	94/6/23
MFG	JF	94/6/24
RELEASE		
CONTR NO.		
GOVT APPVL		

HARTMAN ELECTRICAL MANUFACTURING
MANSFIELD, OHIO

RELAY-50AMP, 115VAC
400 HZ, OR 28VDC

093

SIZE	CODE IDENT	DWG NO.
C	74063	BH-316A

SCALE NONE | SHEET 1 OF 2

BH-316A	REV.

REVISIONS			RELEASED	
REV.	DESCRIPTION		DATE	APPROVED
		SEE SHEET 1 FOR REVISION DETAILS		

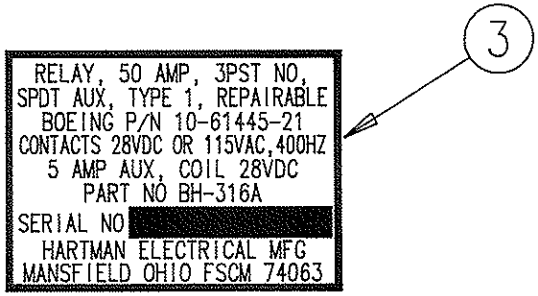

42594-001

NAME PLATE

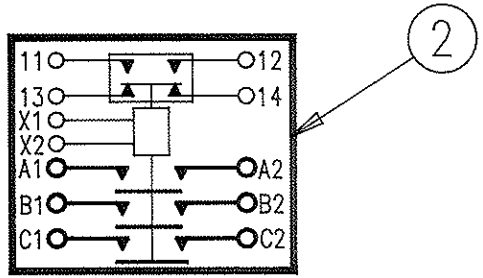

42405-001

WIRING DIAGRAM

NOTES:

1. DIELECTRIC

   MAIN CONTACTS TO ALL MUTUALLY INSULATED POINTS 1500 V RMS

   AUX. CONTACTS TO ALL MUTUALLY INSULATED POINTS 1250 V RMS

   COIL TO ALL MUTUALLY INSULATED POINTS 1000 V RMS

   MAXIMUM LEAKAGE CURRENT FOR ALL DIELECTRIC TEST POINTS IS 1 MA.

2. MTG. HOLES ARE SPOT FACED TOP & BOTTOM
3. ITEMS 4 THRU 9 ARE SILVER PLATED
4. RELAY FINISH IS FLAT BLACK
5. ENCLOSURE IS ALUMINUM (TOP, BOTTOM, AND SIDES)
6. 10-32 TERMINALS ARE STAINLESS STEEL WITH COPPER CORE
7. MANUFACTURING DATE CODE TO BE YEAR, WEEK (YY,XX)
8. REV. "M" ENCOMPASSES USE OF CERAMIC AS SUBSTITUTE FOR GLASS SEAL ON 6/32 AUXILIARY AND COIL TERMINALS.EFFECTIVITY DATE 9224 AND ON,SERIAL No. CK86551 AND HIGHER.
9. 6-32 TERMINALS ARE SILVER PLATED BERYLCO ALLOY 10HT OR 14HT.
10. RELAYS WITH AN "A" SUFFIX AFTER THE SERIAL NUMBER HAVE AN ADDITIONAL EVACUATION TUBE LOCATED AS SHOWN. THIS EVACUATION TUBE MUST NOT EXTEND PAST THE RELAY MOUNTING PLATE OR HAVE SHARP EDGES.

UNLESS OTHERWISE SPECIFIED DIMENSIONS ARE IN INCHES TOLERANCES ON		
2 PL DEC.	3 PL DEC.	ANGLES
±.02	±.005	±1°

REF. BOEING 10-61445-21		
DR BY	RLS	94/6/15
CHK BY	RS	94/6/17
ENGR	DM	94/6/22
MFG		
RELEASE		
CONTR NO.		
GOVT APPVL		

HARTMAN ELECTRICAL MANUFACTURING
MANSFIELD, OHIO

RELAY-50AMP,115 VAC
400 HZ, OR 28VDC

093

SIZE	CODE IDENT	DWG NO.
C	74063	BH-316A
SCALE NONE		SHEET 2 OF 2